Catalogo ricambi
Spare parts list
Catalogue pièce détachées
Ersatzteile katalog

Vokèra BY RIELLO

Wall hung boilers

UNICA MAX 30C

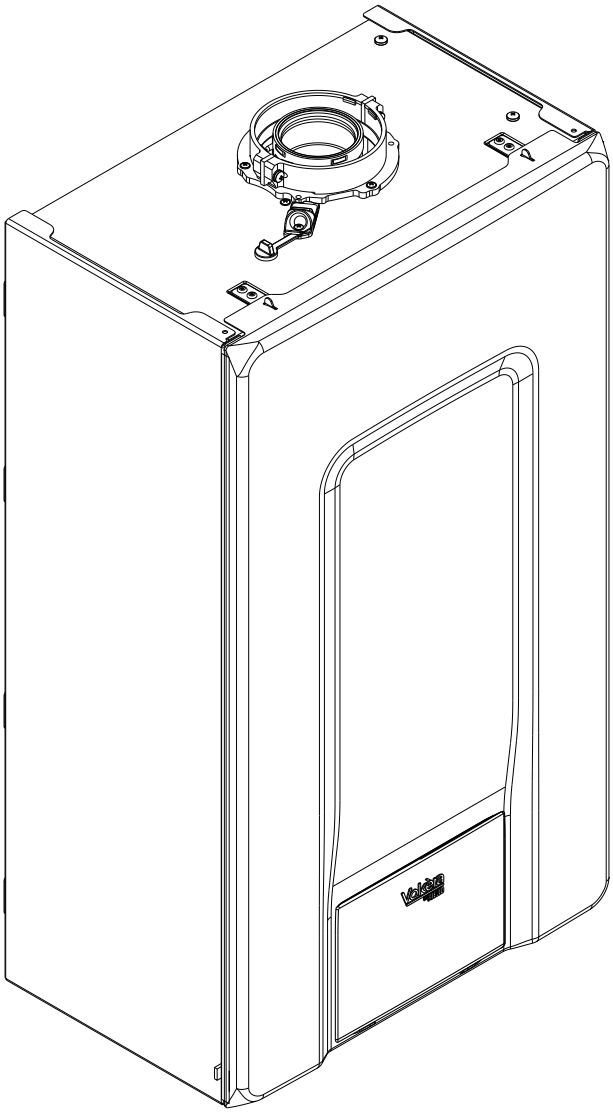

MODEL	PART NUMBER	
	MTN	GPL
Unica Max 30C	20197307	-

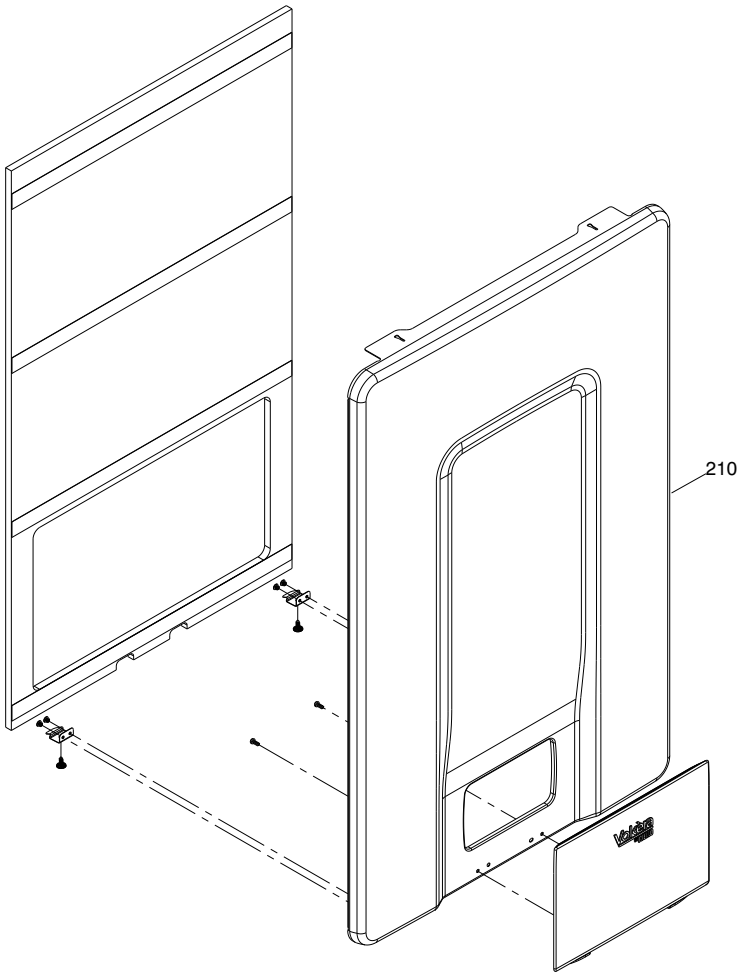
210

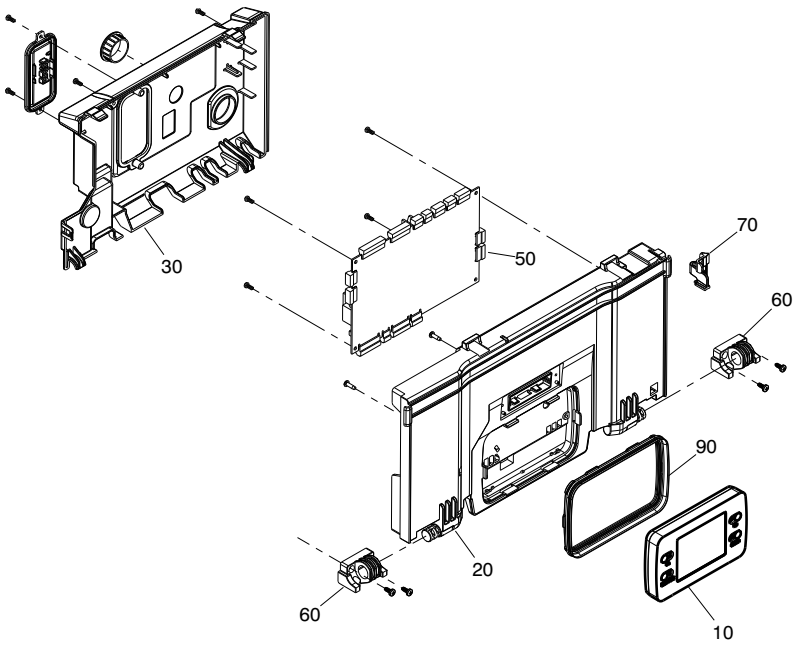
30
50
70
60
90
20
60
10

POS.	DESCRIPTION	30C
10	Remote control	20189301
20	Posterior cover instrumental panel	20194432
30	Electric parts cover	20154281
50	Printed circuit board	20146241
60	Rolling hinge	20123231
70	Instrumental panel fastener	20123230
90	Shaped gasket	20123240
210	Front panel	20191397

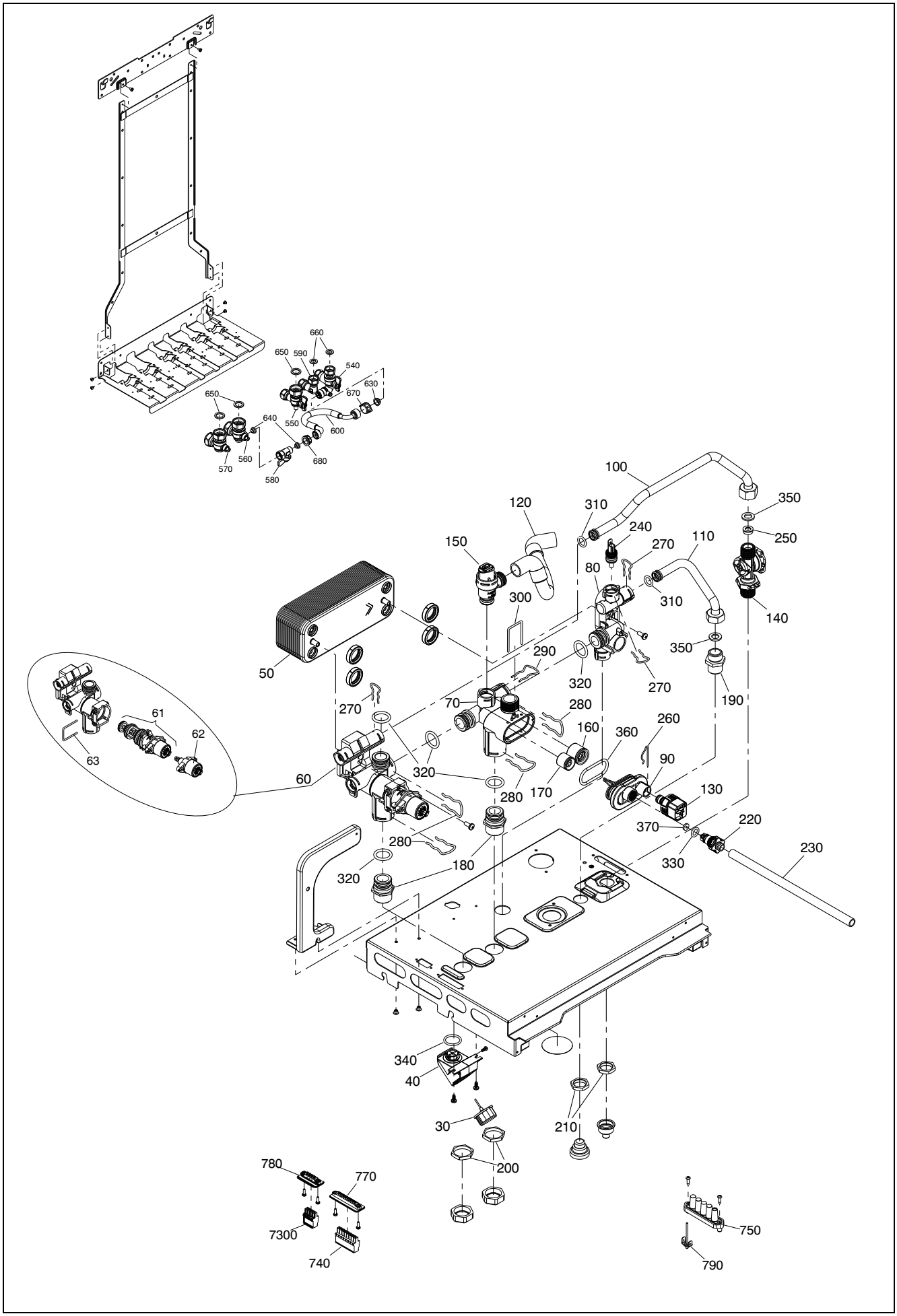
660
650
590
540
630
670
650
640
550
600
560
570
680
580
100
350
120
310
240
250
150
270
110
80
310
300
140
350
290
50
320
270
190
270
70
280
61
160
260
62
360
63
90
320
60
280
170
130
370
220
280
330
230
320
180
340
40
30
210
200
780
770
7300
740
750
790

POS.	DESCRIPTION	30C
30	Quick primer pressure gauge	20049617
40	Water gauge carrier	20123121
50	Heat exchanger	20189868
60	Three way valve	20123980
61	Stepper actuator and cartridge	20123997
62	Stepper actuator	20123996
63	Clip	20123995
70	By-pass casing	R10024641
80	Fitting/union	R10024640
90	Cover for by-pass assembly	R10024643
100	Pipe	20011423
110	Pipe	R10025840
120	Flexible pipe	R10029309
130	Pressure transductor	20188992
140	Dhw actuator	20013968
150	Safety valve	20043820
160	Non return valve	R10025056
170	High head by-pass valve	R1552
180	Fitting/union	R10025059
190	Nipple	R10024985
200	3/4" locknut	R4026
210	1/2" lock nut	R4274
220	Cock	R10024646
230	Pvc tube	R10025068
240	NTC sensor	R10027351
250	Flow governor	R10024987
260	Clip	R2165
270	Clip	R10024986
280	Clip	R10024958
290	Clip	R10025062
300	Clip	R10025063
310	O-ring	R10024988
320	O-ring	R6898
330	O-ring	R10025064
340	O-ring	R10023533
350	Washer	R5026
360	O-ring	R10025065
370	Washer	R10025066
540	Cock	20132651
550	Gas tap	20141319
560	Heat water cock	20132652
570	Heat water cock	20132653
580	Filling cock	20132655
590	Angle pipe	20132654
600	Flexible pipe	20141318
630	Washer	20133198
640	Washer	20133197
650	Washer	R5023
660	Washer	R5026
670	Cap nut	20133199
680	Cap nut	20133200
730	4-pin connector	20154287
740	Connector	20154288
750	Five positions fairlead	20123125
770	Wiring harness	20184336
780	Bus wiring harness	20190415
790	Ground rivet	20154023

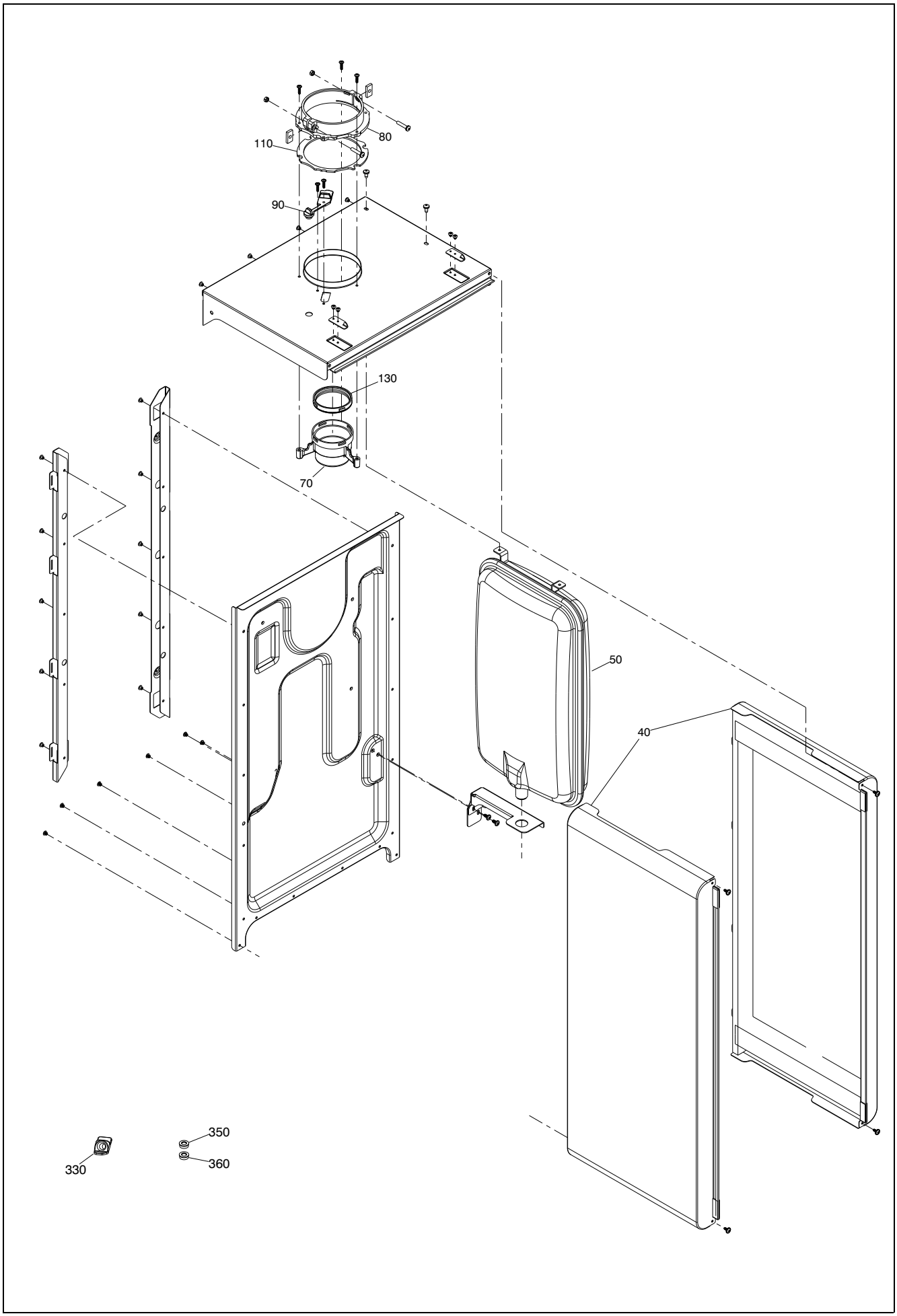
110
80
90
130
70
50
40
350
330
360

POS.	DESCRIPTION	30C
40	Side panel	20139798
50	10 lt. expansion vessel	20135787
70	Flue drain connection	20040102
80	Fumes flange kit	20157135
90	Cap smoke analysis	20157134
110	Flange gasket	20157133
130	Washer Ø 60	R10026345
330	Cap smoke analysis	20171129
350	Flow governor	R10026044
360	Flow governor	R10026045

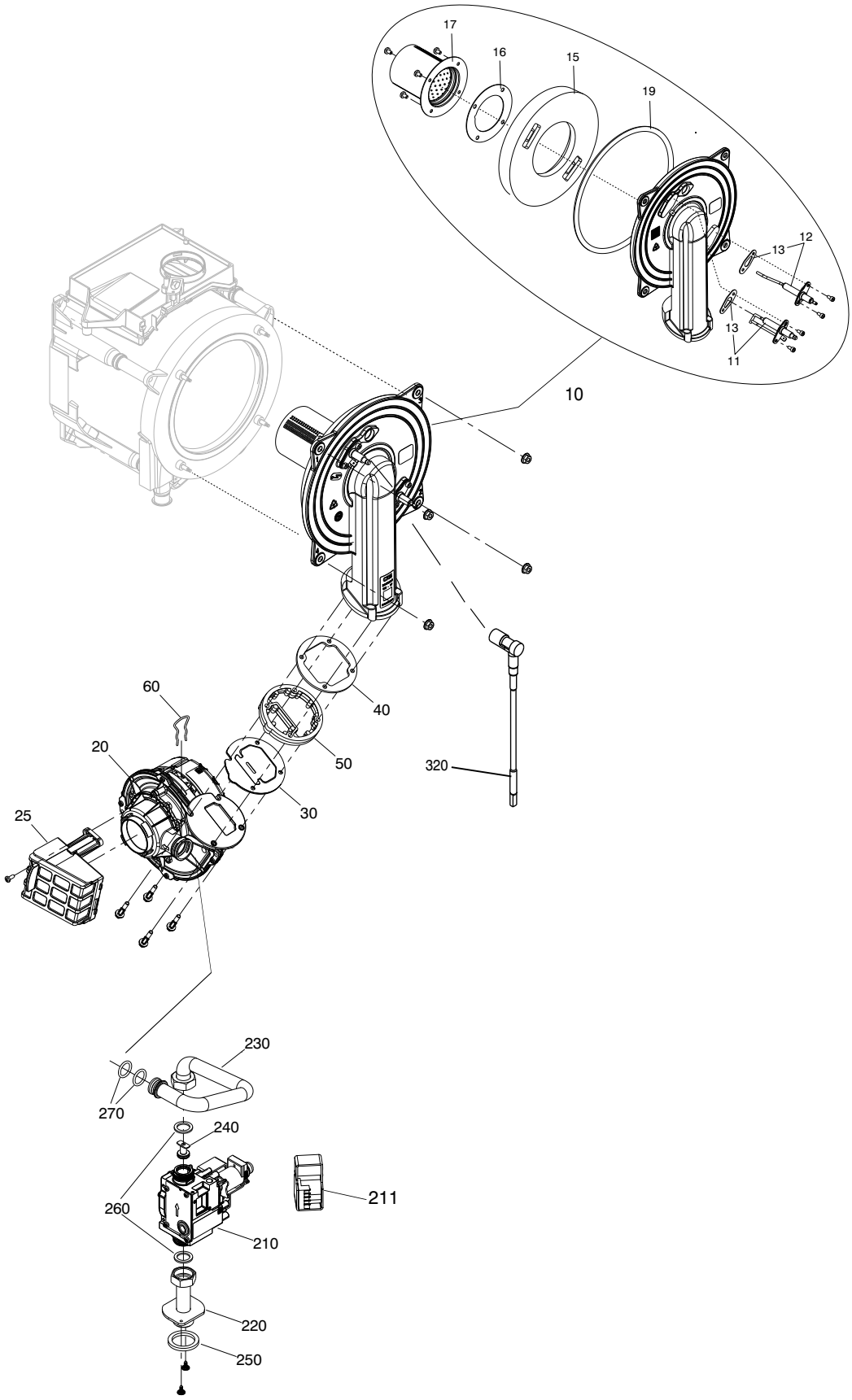
17
16
15
19
12
13
13
11
10
60
40
20
50
320
30
25
230
270
240
211
260
210
220
250

Burner Components - Air Box	Drawing 4

POS.	DESCRIPTION	30C
10	Air/gas conveyor	20177651
11	Ignition electrode	20135946
12	Sensing electrode	20135947
13	Electrode seal	20157191
15	Insulation panel	20177648
16	Seal burner	20135949
17	Premix burner	20136089
19	Washer	20135951
20	Integrated fan	20136075
25	Air filter	20190419
30	Non return valve	20169395
40	Washer	20135952
50	Spacer	20177790
60	Clip	R10025062
210	Antisticking gas valve	20123161
211	Gas valve solenoid	20040675
220	Pipe	20123151
230	Pipe	20154285
240	Ø5.2 diaphragm	20152553
250	Gasket	20123159
260	Washer	R5023
270	Washer	20024869
320	Spark electrode cable	20197816

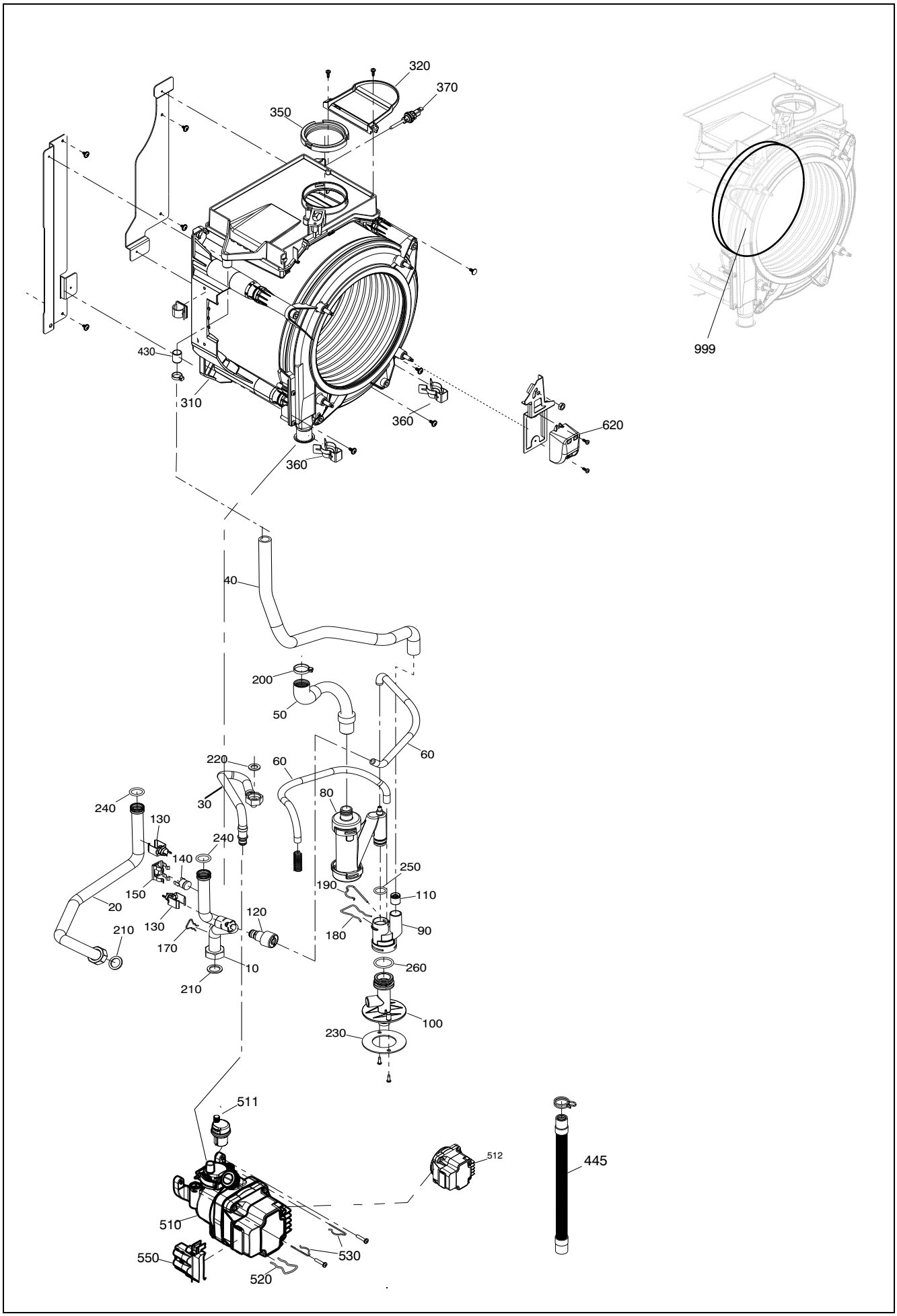
320
370
350
999
430
310
360
620
360
40
200
50
60
220
60
80
240
30
130
240
140
250
190
110
150
20
120
130
180
90
210
170
10
260
210
100
230
511
512
445
510
530
550
520

Combustion Chamber Components - Flue Drain

Drawing 5

POS.	DESCRIPTION	30C
10	Pipe	20167473
20	Pipe	20154283
30	Pipe	R10025188
40	Condensing pipe	20191408
50	Pipe	20190420
60	Tube kit	20136036
80	Siphon	20188455
90	Condensation outlet (drainage) manifold	20190416
100	Bracket	20190417
110	Non return valve	20188456
120	Cock	20000533
130	Temperature detector	20188488
140	High limit thermostat	20005585
150	Clip	R5472
170	Clip	20000539
180	Clip	R10023532
190	Clip	R2222
210	Washer	R10023699
220	Washer	R5026
230	Washer	20188453
240	O ring	20152424
250	O-Ring	20140935
260	O ring	R10026324
310	Condensing exchanger assembly	20177653
320	Rain coat for exchanger	20135930
350	Washer Ø 60	R10028426
360	Spring pipe	20000130
370	Flue sensor	20135782
430	Hole cover	20181027
445	Condensation outlet tube	20100816
510	Pump	20191108
511	Air vent bottle	20169571
512	Motor	20195457
520	Clip	R10025062
530	Clip	R2165
550	Cover	20180465
620	Ignition transformer	20001563
999	Retarder insulating panel	20159693

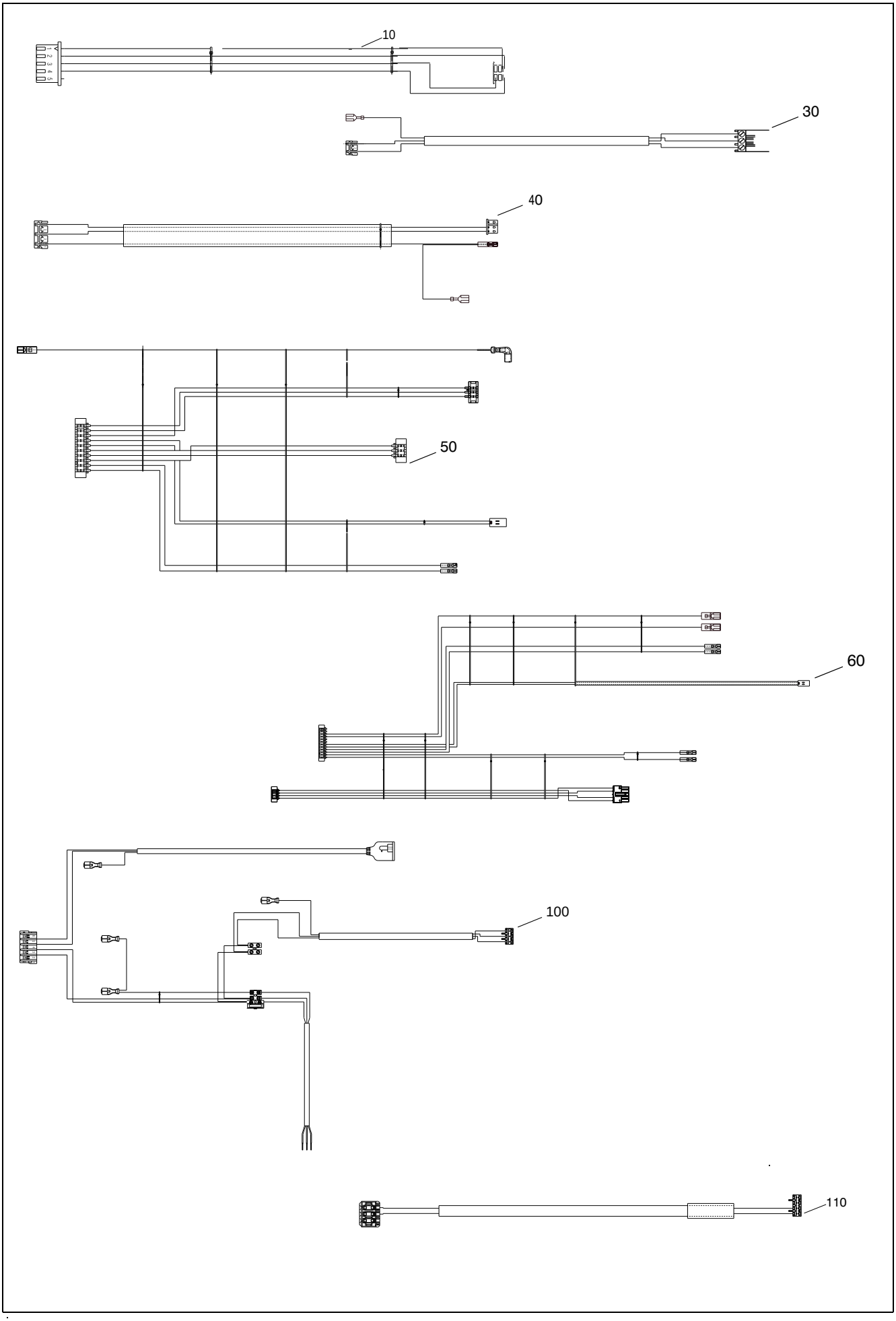
10
30
40
50
60
100
110

Wiring harness components — Drawing 6

POS.	DESCRIPTION	30C
10	Three-way valve cable	20123209
30	Fan wiring harness	20135794
40	Flame wiring harness	20197819
50	Low tension cable	20135800
60	Combustion cable	20152422
100	Power wiring harness	20190421
110	Pump cable (PWM)	20190422

Rev.	data	Descrizione

Vokera reserve the right to change the specifications without prior notice.
Consumers' statutory rights are not affected.