Drawing No.	775.01.03	Sht	1
		Of	2

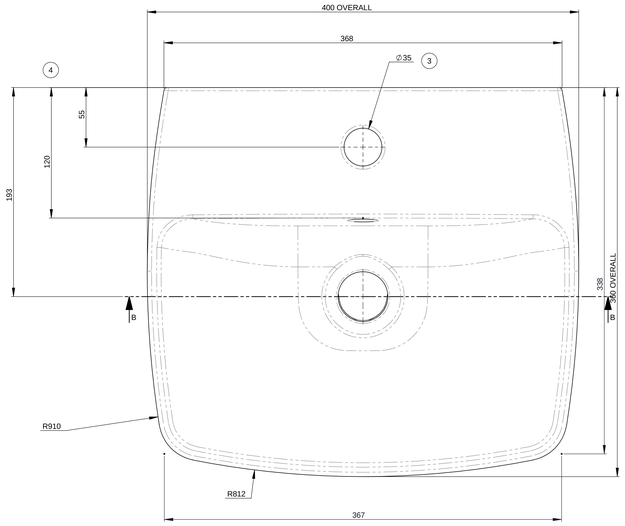

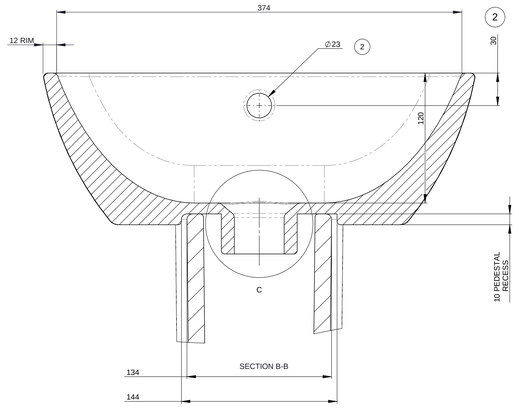

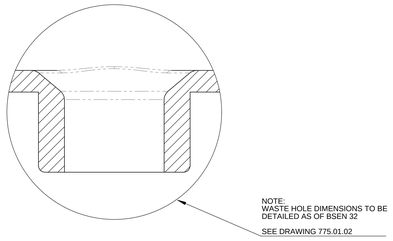

DETAIL C
SCALE 1 : 1

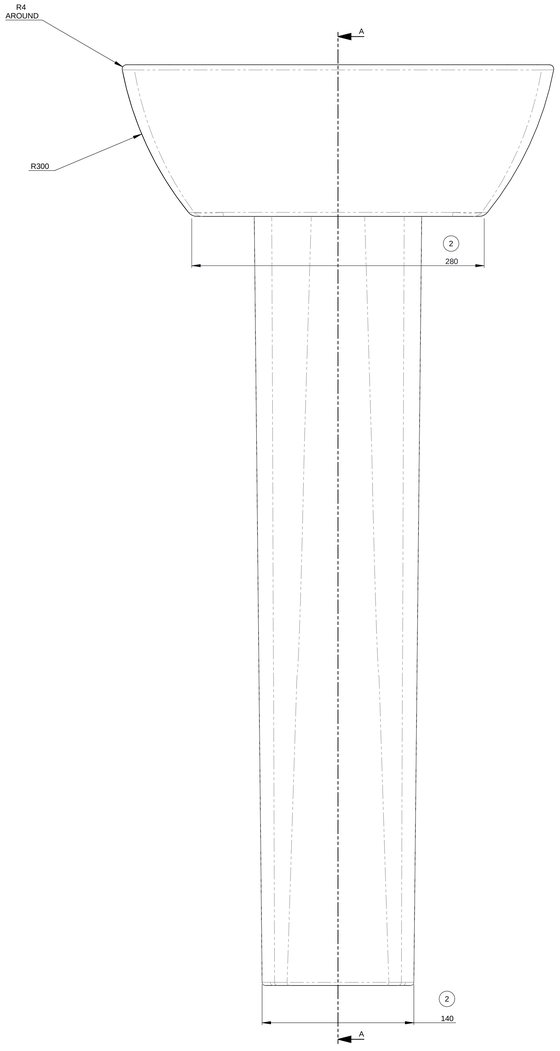

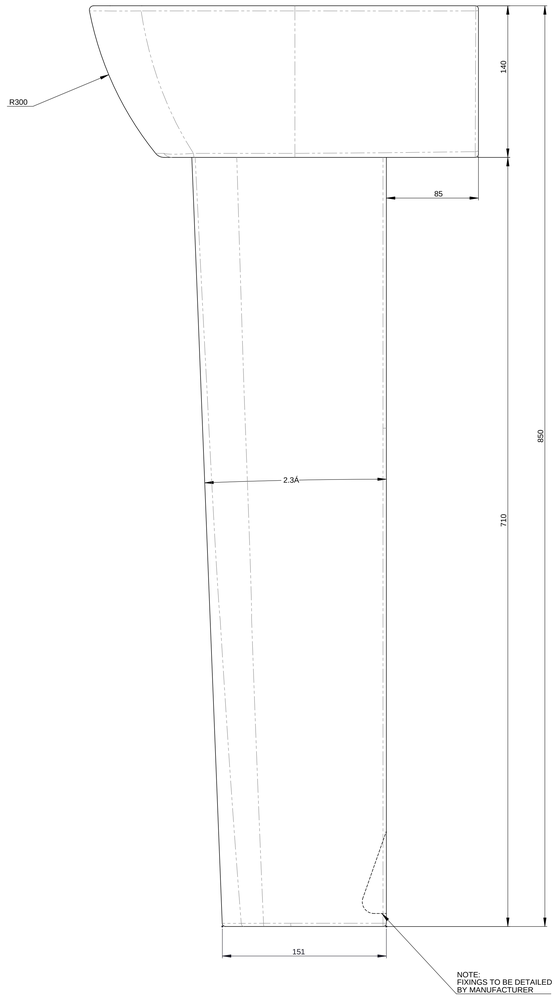

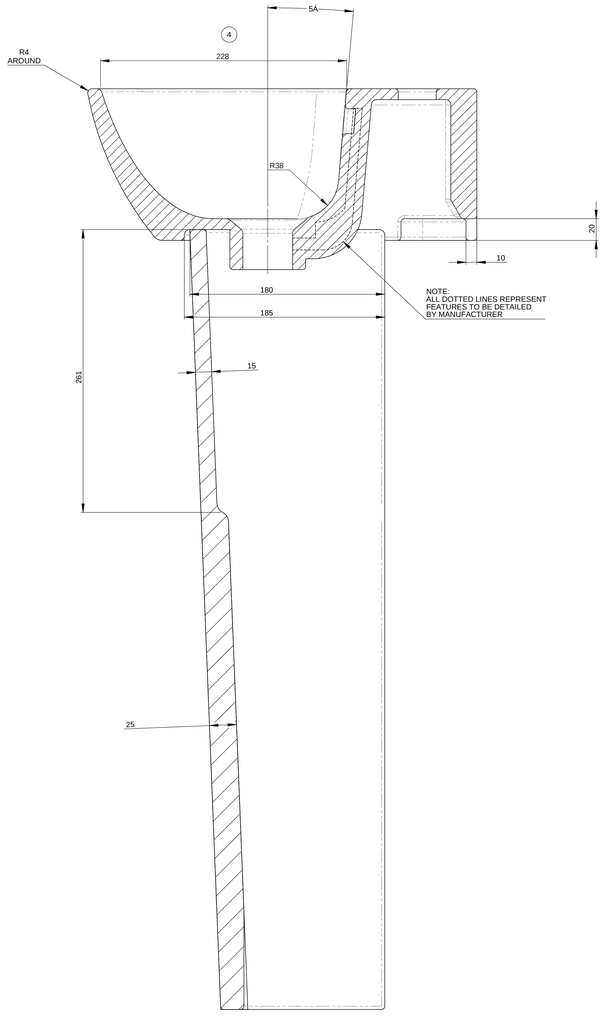

SECTION A-A

NOTES: UNLESS OTHERWISE STATED

1. ALL FIXING AND TOOLING FEATURES TO BE DETAILED BY MANUFACTURER AND AGREED WITH CROSSWATER PRIOR TO PRODUCTION.

Iss No.	DESCRIPTION OF MODIFICATION	Date	By
5	3D CAD UPDATE	08/05	JS
4	TAP DECK WAS 110 NOW 120	05/03	BI
3	DIM ∅35.0 WAS ∅32.0	16/09	BI
2	DIM 280.0 WAS 270 DIM ∅23.0 WAS ∅20.0 DIM 140.0 WAS 130.0 DIM 30.0 WAS 35.0	9/9/14	RB
1	Detailed Design Issue	10/07	BI

TOLERANCES EXCEPT WHERE OTHERWISE STATED

LINEAR DIMS	1 D.P.	2 D.P.
UP TO 10	+/-0.2	+/-0.1
>10 UP TO 120	+/-0.3	+/-0.2
>120 UP TO 200	+/-0.4	+/-0.3
>200	+/-0.25%	+/-0.15%
ON ANGLES	+/-1.0D	+/-0.5D

ALL DIMENSIONS TO BE IN mm UNLESS STATED

SURFACE FINISH (Ra) UNLESS STATED

3rd ANGLE

DO NOT SCALE

Project: SOFT SQUARE

Description: 40cm BASIN & PEDESTAL

COPYRIGHT IN THIS DESIGN AND THIS DRAWING IS THE PROPERTY OF BLUEFROG DESIGN

Scale: 1:2

Date: 10/07/2014

Drawn: B.IRVINE

bluefrog design
a 19 St Margarets Street Leicester LE1 3EB
t +44 (0)116 2530612 f +44 (0)116 2625737
e mail@bluefrogdesign.co.uk

Client: CROSSWATER

Drawing Number: 775.01.03

Sht 1
Of 2

Drawing No.	775.01.03	Sht	2
		Of	2

NOTES: UNLESS OTHERWISE STATED

1. ALL FIXING AND TOOLING FEATURES TO BE DETAILED BY MANUFACTURER AND AGREED WITH CROSSWATER PRIOR TO PRODUCTION.

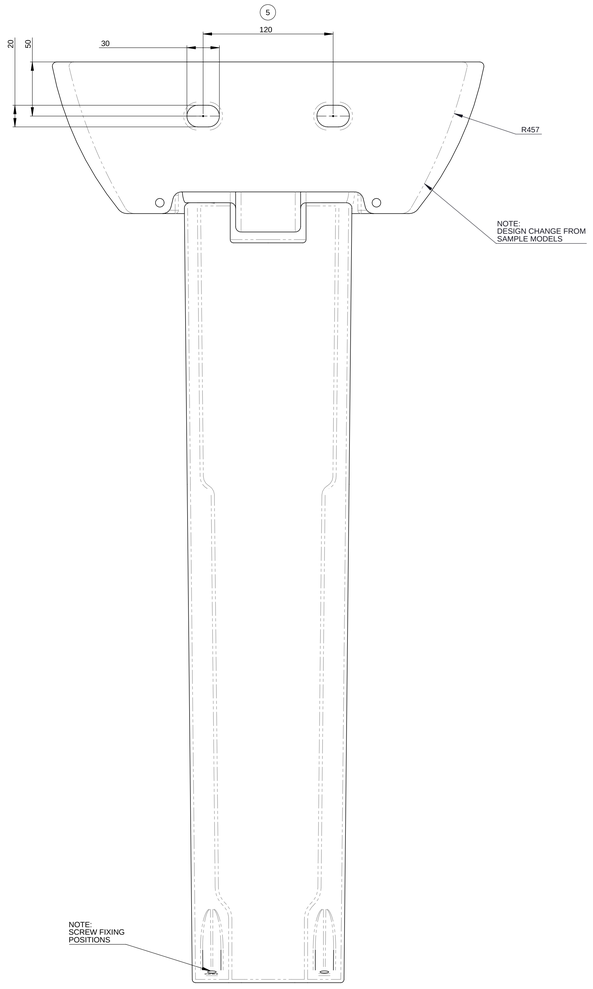

E5010 BRACKETS

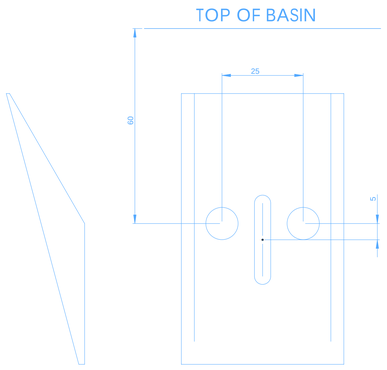

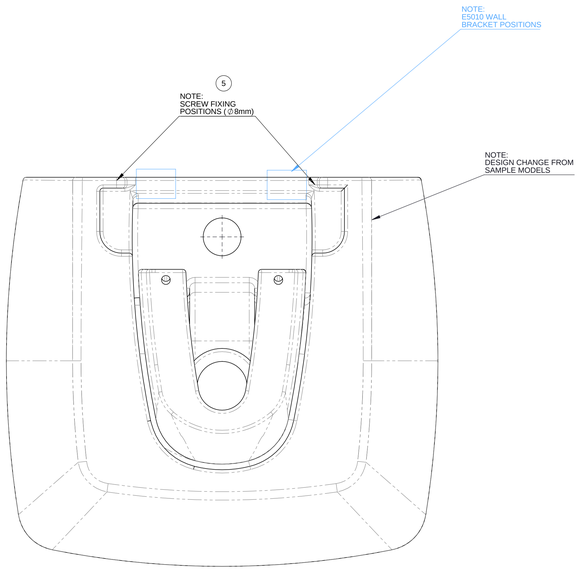

Iss No.	DESCRIPTION OF MODIFICATION	Date	By
5	3D CAD UPDATE	08/05	JS
4	TAP DECK WAS 110 NOW 120	05/03	BI
3	DIM ∅35.0 WAS ∅32.0	16/09	BI
2	DIM 280.0 WAS 270 DIM ∅23.0 WAS ∅20.0 DIM 140.0 WAS 130.0 DIM 30.0 WAS 35.0	9/9/14	RB
1	Detailed Design Issue	10/07	BI

TOLERANCES EXCEPT WHERE OTHERWISE STATED

LINEAR DIMS	1 D.P.	2 D.P.
UP TO 70	+/-0.2	+/-0.1
>70 UP TO 120	+/-0.3	+/-0.2
>120 UP TO 200	+/-0.4	+/-0.3
>200	+/-0.25%	+/-0.15%
ON ANGLES	+/-1.00	+/-0.50

ALL DIMENSIONS TO BE IN mm UNLESS STATED

SURFACE FINISH (Ra) UNLESS STATED

3rd ANGLE

DO NOT SCALE

Project: SOFT SQUARE

Description: 40cm BASIN & PEDESTAL

COPYRIGHT IN THIS DESIGN AND THIS DRAWING IS THE PROPERTY OF BLUEFROG DESIGN

Scale: 1:2

Date: 10/07/2014

Drawn: B.IRVINE

bluefrog design

a 19 St Margarets Street Leicester LE1 3EB
t +44 (0)116 2530612 f +44 (0)116 2625757
e mail@bluefrogdesign.co.uk

Client: CROSSWATER

Drawing Number: 775.01.03

Sht 2 **Of** 2