Rooms L1-L9
Digital Media Room
Design Block
FIRE

LST i PLUS

Stelrad Radiator Group

Safety Series

50 Δt

(75/65/20°C)

K1

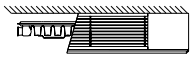

P+

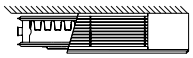

K2

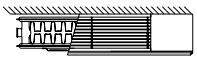

Casing Height mm	Casing Length mm	Emitter Height mm	Emitter Length mm	Stelrad UIN	Heat output Watts	Heat output Btu/hr	Stelrad UIN	Heat output Watts	Heat output Btu/hr	Stelrad UIN	Heat output Watts	Heat output Btu/hr
500	650	300	400	145200	196	669	145248	284	969	145224	348	1187
	850	300	600	145201	293	1000	145249	426	1454	145225	522	1781
	1050	300	800	145202	391	1334	145250	568	1938	145226	696	2375
	1250	300	1000	145203	489	1668	145251	710	2423	145227	870	2968
	1450	300	1200	145204	587	2003	145252	852	2907	145228	1044	3562
	1650	300	1400	145205	685	2337	145253	994	3392	145229	1218	4156
	1850	300	1600	145206	782	2668	145254	1136	3876	145230	1392	4750
	2050	300	1800	145207	880	3003	145255	1278	4361	145231	1566	5343
650	650	450	400	145208	290	989	145256	386	1317	145232	478	1631
	850	450	600	145209	435	1484	145257	580	1979	145233	717	2446
	1050	450	800	145210	580	1979	145258	773	2637	145234	956	3262
	1250	450	1000	145211	725	2474	145259	966	3296	145235	1195	4077
	1450	450	1200	145212	870	2968	145260	1159	3955	145236	1434	4893
	1650	450	1400	145213	1015	3463	145261	1352	4613	145237	1673	5708
	1850	450	1600	145214	1160	3958	145262	1546	5275	145238	1912	6524
	2050	450	1800	145215	1305	4453	145263	1739	5933	145239	2151	7339
800	650	600	400	145216	365	1245	145264	501	1709	145240	615	2098
	850	600	600	145217	548	1870	145265	751	2562	145241	922	3146
	1050	600	800	145218	730	2491	145266	1002	3419	145242	1230	4197
	1250	600	1000	145219	913	3115	145267	1252	4272	145243	1537	5244
	1450	600	1200	145220	1096	3740	145268	1502	5125	145244	1844	6292
	1650	600	1400	145221	1278	4361	145269	1753	5981	145245	2152	7343
	1850	600	1600	145222	1461	4985	145270	2003	6834	145246	2459	8390
	2050	600	1800	145223	1643	5606	145271	2254	7691	145247	2767	9441

Δt50 is the UK's industry standard for heating outputs, which has an operating temperature of 75/65/20ºC. If you have a low temperature heat source you may wish to consider Δt40 or Δt30 output (see your installer or system designer or download from www.stelrad.com).

For EN442 data, technical and installation information please visit our website: www.stelrad.com and search product downloads.

WALL FIXINGS AND BRACKET POSITIONS

All dimensions in mm. Inches in brackets.

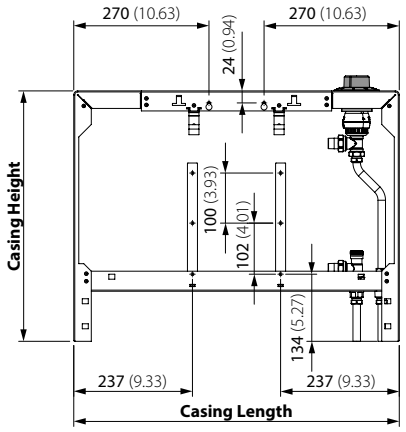

Casing Length mm	Casing Height mm
650	500
850	650
1050	800

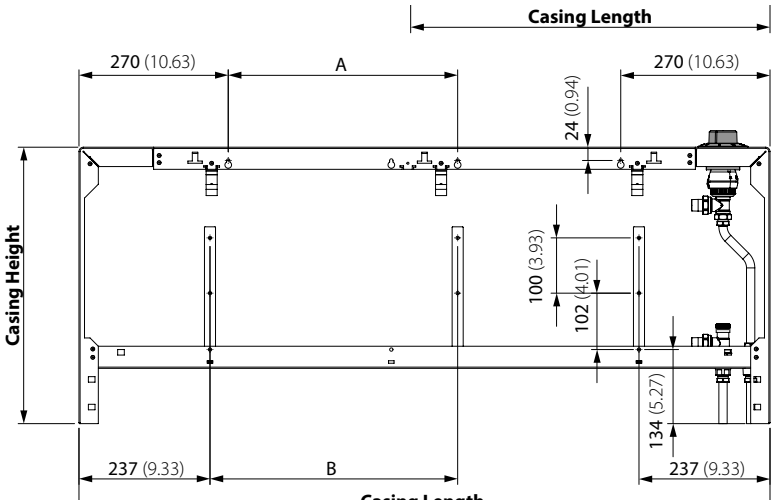

Casing Length mm	A mm	B mm
1250	415	448
1450	515	548
1650	615	648
1850	715	748
2050	815	848

Casing Height mm
500
650
800

CONNECTION OPTIONS

Each radiator comes with ½" inlet connections as standard.
All dimensions in mm. Inches in brackets.

CONTROL ON RIGHT-HAND SIDE

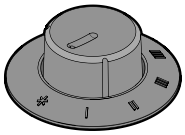

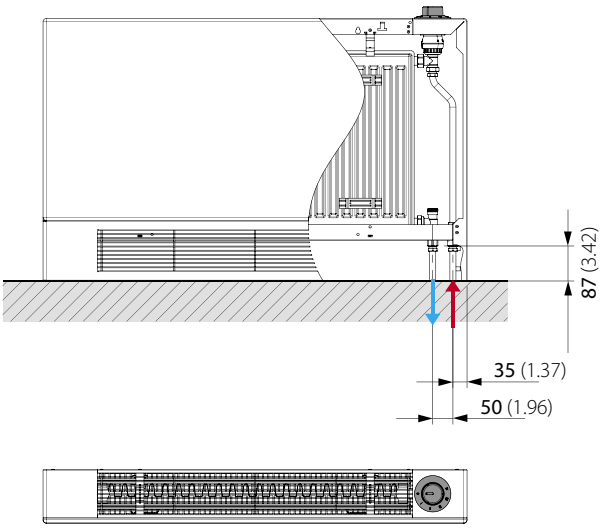

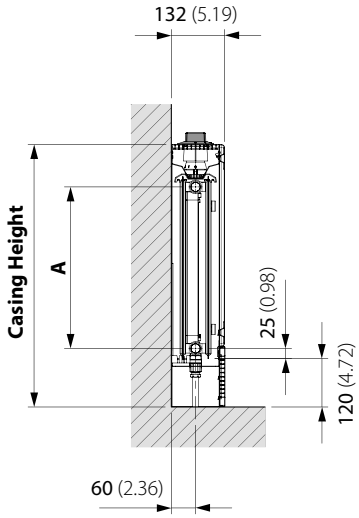

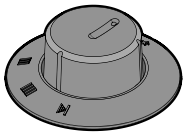

CONTROL ON LEFT-HAND SIDE

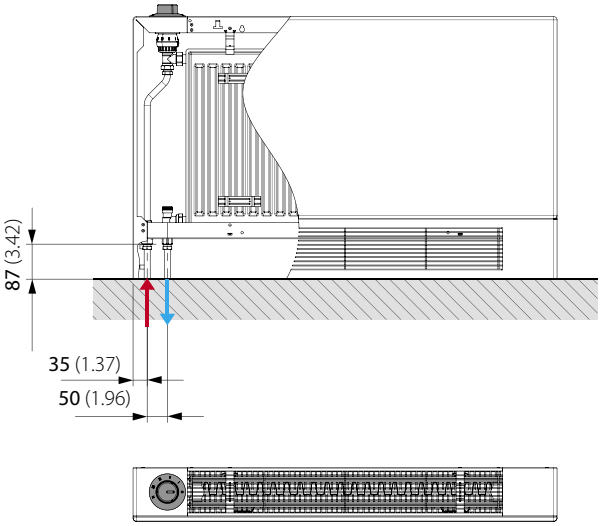

PIPE CONFIGURATIONS

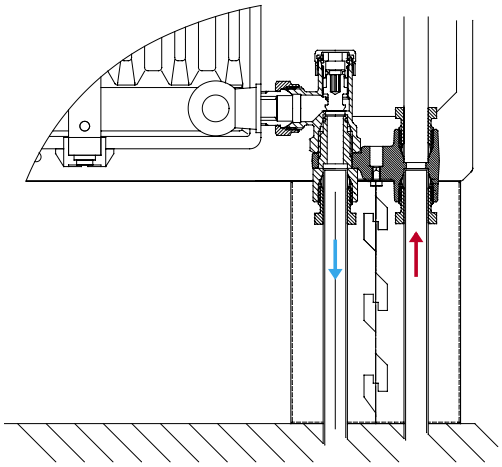

LST i PLUS

Stelrad Radiator Group

Safety Series

EN 442 CERTIFICATION DATA - CETIAT TESTED IN ACCORDANCE WITH BS EN 442

Type	K1			P+			K2		
Casing height	500	650	800	500	650	800	500	650	800
Emitter height	300	450	600	300	450	600	300	450	600
W/m at 75/65/20	489	725	913	710	966	1252	870	1195	1537
n-coefficients	1.19	1.25	1.34	1.24	1.27	1.31	1.27	1.30	1.32
Heated surface area (m^2/m)	2.09	3.37	4.66	2.44	3.84	5.24	3.51	5.62	7.74
Weight (kg/m)	17.80	23.50	29.40	22.70	30.72	38.40	24.40	33.30	42.50
Water contents (l/m)	1.89	2.57	3.25	3.70	5.15	6.60	3.70	5.15	6.60

COMPONENTS

LST i Plus front case view.

LST i Plus inside the casing showing the emitter.

LST i Plus oblong knockout for pipe.

Optional cover cap to discourage unauthorised tampering.

An arthritic adaptor is supplied as standard for special needs environments.

Accommodated within the casing, the Stelrad LST i Plus emitter, with TBSE valve arrangement and 2 x ½" BSP connections as standard.

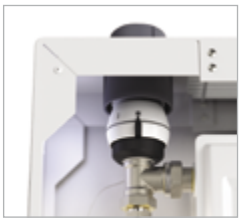

Includes Danfoss RA-2000 TRV and copper pipe configuration.

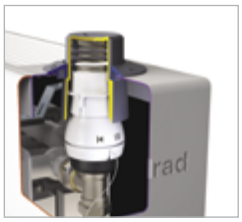

The remote sensing thermostatic valve gives accuracy of operation and the limiting device is completely hidden to prevent the maximum temperature being exceeded.